THE BEST OF TOOLS PROJECTS

from the pages of MAKE

AND YOU SHALL KNOW US BY THE CHARACTER OF OUR TOOLS

They say tools are part of what make us uniquely human. While we're not the only lifeform that uses them, we may be the only species that revels in their use. We venerate our tools, we love them, not only for what they help us do, but for the possibilities of future creations that they encode. We aspire through our tools. We take comfort in the fact that they're always there, at the ready, waiting for a plan, and a few moments of stolen time. Finding "the right tool for the job" can become something of an obsession. What follows are some of our recommendations for right tools, whether for your next Eureka moment, or your next toaster-oven repair.

Your Electronics Workbench

WHAT YOU NEED TO GET STARTED IN HOBBY ELECTRONICS.

By Charles Platt

THE BASICS

First, you will need a breadboard. You can, of course, call it a "prototyping board," but this is like calling a battery a "power cell." Search RadioShack online for "breadboard" and you will find more than a dozen products, all of them for electronics hobbyists, and none of them useful for doing anything with bread.

A breadboard is a plastic strip perforated with holes 1/10" apart, which happens to be the same spacing as the legs on old-style silicon chips — the kind that were endemic in computers before the era of surface-mounted chips with legs so close together only a robot could love them. Fortunately for hobbyists, old-style chips are still in plentiful supply and are simple to play with.

Your breadboard makes this very easy. Behind its holes are copper conductors, arrayed in hidden rows and columns. When you push the wires of components into the holes, the wires engage with the conductors, and the conductors link the components together, with no solder required.

Figure 1 (on page 10) shows a basic breadboard. You insert chips so that their legs straddle the central groove, and you add other components on either side. Figure 1 also shows the bottom of a printed circuit (PC) board that has the same pattern of copper connectors as the breadboard. First you use the breadboard to make sure everything works, then you transpose the parts to the PC board, pushing their wires through from the top. You immortalize your circuit by soldering the wires to the copper strips.

Soldering, of course, is the tricky part. As always, it pays to get the right tool for the job. I never used to believe this, because I grew up in England, where "making do with less" is somehow seen as a virtue.

When I finally bought a 15-watt pencil-sized soldering iron with a very fine tip (Figure 2), I realized I had spent years punishing myself. You need that very fine-tipped soldering iron, and thin solder to go with it. You also need a loupe — the little magnifier included in Figure 2. A cheap plastic one is quite sufficient. You'll use it to make sure that the solder you apply to the PC board has not run across any of the narrow spaces separating adjacent copper strips, thus creating short circuits.

Short circuits are the #2 cause of frustration when a project that worked perfectly on a breadboard becomes totally uncommunicative on a PC board. The #1 cause of frustration (in my experience, anyway) would be dry joints.

Any soldering guide will tell you to hold two metal parts together while simultaneously applying solder and the tip of the soldering iron. If you can manage this far-fetched anatomical feat, you must

Illustration by Damien Scogin

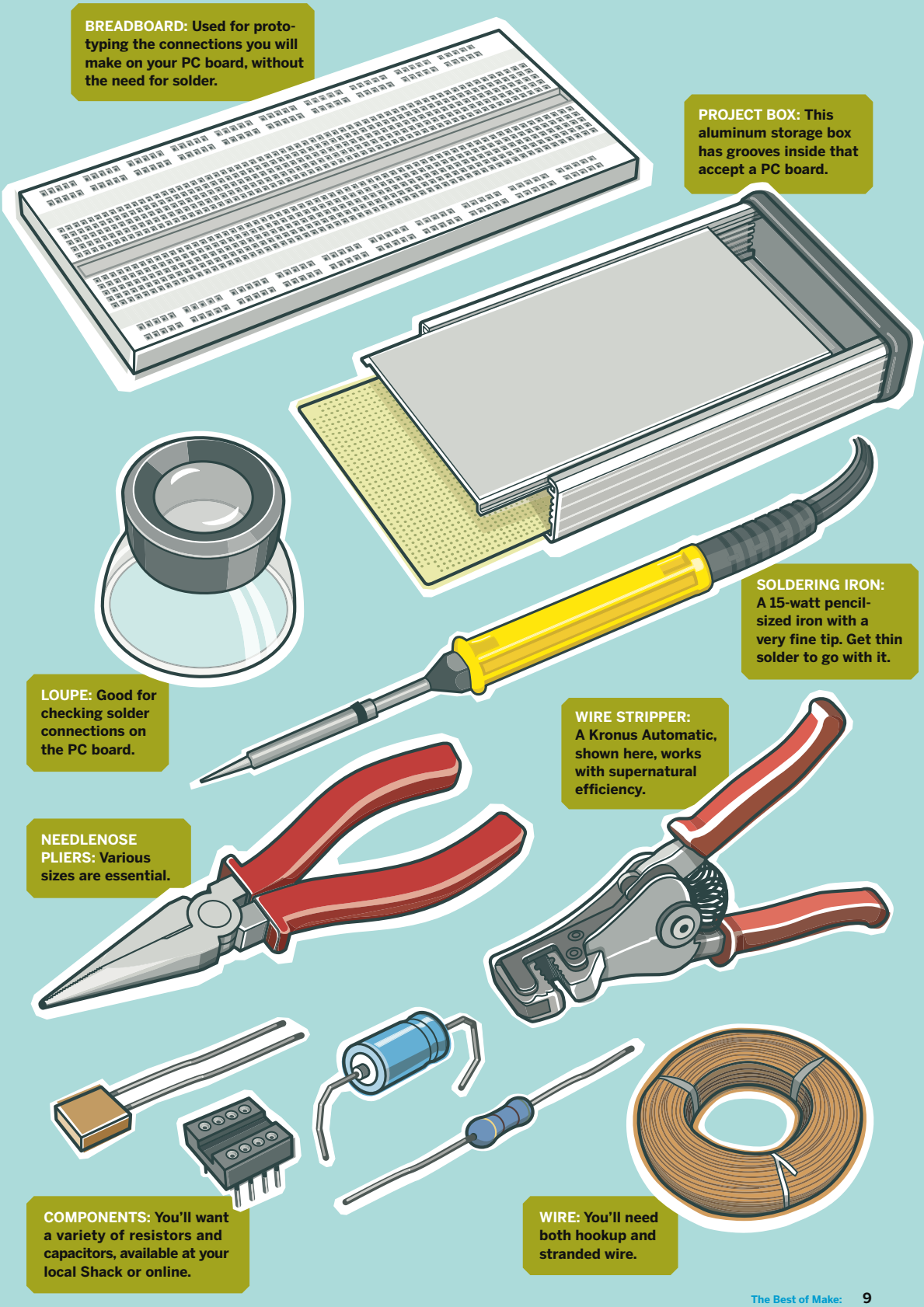
BREADBOARD: Used for prototyping the connections you will make on your PC board, without the need for solder.
PROJECT BOX: This aluminum storage box has grooves inside that accept a PC board.
SOLDERING IRON: A 15-watt pencil-sized iron with a very fine tip. Get thin solder to go with it.
LOUPE: Good for checking solder connections on the PC board.
WIRE STRIPPER: A Kronus Automatic, shown here, works with supernatural efficiency.
NEEDLENOSE PLIERS: Various sizes are essential.
COMPONENTS: You'll want a variety of resistors and capacitors, available at your local Shack or online.
WIRE: You'll need both hookup and stranded wire.

also watch the solder with supernatural close-up vision. You want the solder to run like a tiny stream that clings to the metal, instead of forming beads that sit on top of the metal. At the precise moment when the solder does this, you remove the soldering iron. The solder solidifies, and the joint is complete.

You get a dry joint if the solder isn't quite hot enough. Its crystalline structure lacks integrity and crumbles under stress. If you have joined two wires, it's easy to test for a dry joint: you can pull them apart quite easily. On a PC board, it's another matter. You can't test a chip by trying to pull it off the board, because the good joints on most of its legs will compensate for any bad joints.

You must use your loupe to check for the bad joints. You may see, for instance, a wire-end perfectly centered in a hole in the PC board, with solder on the wire, solder around the hole, but no solder actually connecting the two. This gap of maybe 1/100" is quite enough to stop everything from working, but you'll need a good desk lamp and high magnification to see it.

A FEW COMPONENTS AND TOOLS

Just as a kitchen should contain eggs and orange juice, you'll want a variety of resistors and capacitors (Figure 3). Your neighborhood Shack can sell you prepackaged assortments, or you can shop online at mouser.com or eBay.

After you buy the components, you'll need to sort and label them. Some may be marked only with colored bands to indicate their values. With a multimeter (a good one costs maybe $50) you can test the values instead of trying to remember the color-coding system. For storage I like the kind of little plastic boxes that craft stores sell to store beads.

For your breadboard you will need hookup wire. This is available in precut lengths, with insulation already stripped to expose the ends. You'll also need stranded wire to make flexible connections from the PC board to panel-mounted components such as LEDs or switches. To strip the ends of the wire, nothing

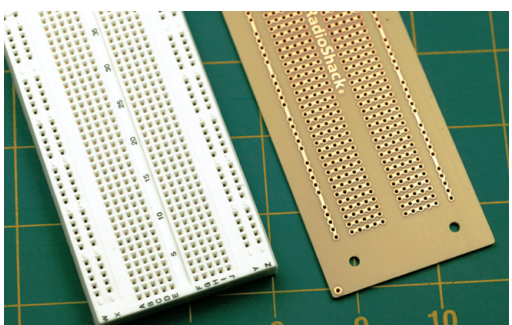

Fig. 1: Breadboard (left); upturned PC board.

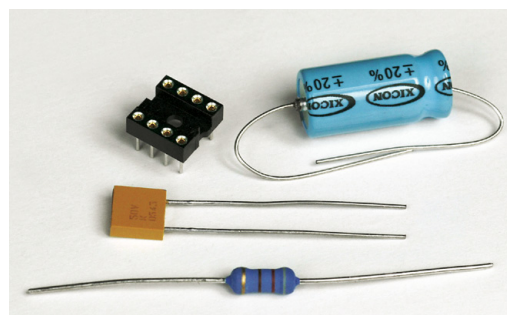

Fig. 3: Socket, big and small capacitors, resistor (front).

Fig. 2: Pencil-tip soldering iron and a loupe.

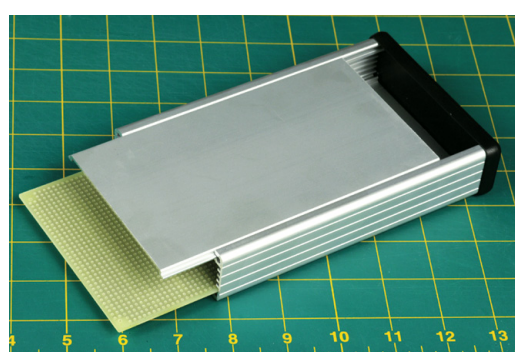

Fig. 4: Hammond Instruments project box and PCB.

Photography by Charles Platt

> “ELECTRONICS IS A MUCH CHEAPER HOBBY THAN MORE VENERABLE CRAFTS SUCH AS WOODWORKING, AND IT CONSUMES VERY LITTLE SPACE.”

beats the Kronus Automatic Wire Stripper, which looks like a monster but works with supernatural efficiency, letting you do the job with just one hand.

Needlenose pliers and side cutters of various sizes are essential, with perhaps tweezers, a miniature vise to hold your work, alligator clips, and that wonderfully mysterious stuff, heat-shrink tubing (you will never use electrical tape again). To shrink the heat-shrink tube, you'll apply a Black and Decker heat gun.

If this sounds like a substantial investment, it isn't. A basic workbench should entail no more than a $250 expenditure for tools and parts. Electronics is a much cheaper hobby than more venerable crafts such as woodworking, and since all the components are small, it consumes very little space.

For completed projects you need, naturally enough, project boxes. You can settle for simple plastic containers with screw-on lids, but I prefer something a little fancier. Hammond Instruments makes a lovely brushed aluminum box with a lid that slides out to allow access. Grooves inside the box accept a PC board. My preferred box has a pattern of conductors emulating three breadboards put together (Figure 4). This is big enough for ambitious projects involving multiple chips.

LEARN THE RULES

The final and perhaps most important thing you will need is a basic understanding of what you are doing, so that you will not be a mere slave to instructions, unable to fix anything if the project doesn't work. Read a basic electronics guide to learn the relationships between ohms, amperes, volts, and watts, so that you can do the numbers and avoid burning out a resistor with excessive current or an LED with too much voltage. And follow the rules of troubleshooting:

» LOOK FOR DEAD ZONES. This is easy on a breadboard, where you can include extra LEDs to give a visual indication of whether each section is dead or alive. You can use piezo beepers for this purpose, too. And, of course, you can clip the black wire of your meter to the negative source in your circuit, then touch the red probe (carefully, without shorting anything out!) to points of interest. If you get an intermittent reading when you flex the PC board gently, almost certainly you have a dry joint somewhere, making and breaking contact. More than once I have found that a circuit that works fine on a naked PC board stops working when I mount it in a plastic box, because the process of screwing the board into place flexes it just enough to break a connection.

» CHECK FOR SHORT CIRCUITS. If there's a short, current will prefer to flow through it, and other parts of the circuit will be deprived. They will show much less voltage than they should.

Alternatively you can set your meter to measure amperes and then connect the meter between one side of your power source and the input point on your circuit. A zero reading on the meter may mean that you just blew its internal fuse because a short circuit tried to draw too much current.

» CHECK FOR HEAT-DAMAGED COMPONENTS. This is harder, and it's better to avoid damaging the components in the first place. If you use sockets for your chips, solder the empty socket to the PC board, then plug the chip in after everything cools. When soldering delicate diodes (including LEDs), apply an alligator clip between the soldering iron and the component. The clip absorbs the heat.

Tracing faults in circuits is truly an annoying process. On the upside, when you do manage to put together an array of components that works properly, it usually keeps on working cooperatively, without change or complaint, for many decades — unlike automobiles, lawn mowers, power tools, or, for that matter, people.

To me this is the irresistible aspect of hobby electronics. You end up with something that is more than the sum of its parts — and the magic endures.

Charles Platt is a frequent contributor to MAKE, has been a senior writer for *Wired*, and has written science fiction novels, including *The Silicon Man*.

THE MAKER'S ULTIMATE TOOLS

The tools we use — or wish we could get our hands on. By Saul Griffith

Here's what would go into an extremely expensive ideal toolbox for someone who wants to be able to make pretty much anything, from ultimate fighting robots to hybrid go-karts, and even play around with microelectromechanical systems. You can and will make do without these, but in a perfect world, where the streets are paved with socket wrenches, these five tools would be in your basement. For the complete list, turn to page 14. For an ultimate tools narrative, go to *makezine.com/03/ultimate*.

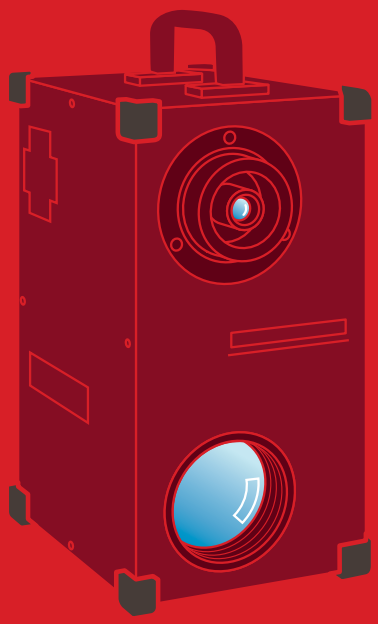

3D Printer, $25,000

zcorp.com/products/printers.asp

This makes surprisingly beautiful parts; just don't expect them to be robust. It's the fastest way to go from computer model to physical part. My pick of the bunch is Z Corp's printer — it's the cheapest and fastest. Neat fact: They're used to print replacement body parts.

3D Scanner, $30,000

kmpi.konicaminolta.us/vivid/default.asp

These machines are still quite expensive, and accuracy depends on how much you spend and the size of the object you are scanning. They're used a lot these days for restoration of antiquities and sculptures as well as assisting in surgery.

Illustrations by Nik Schulz

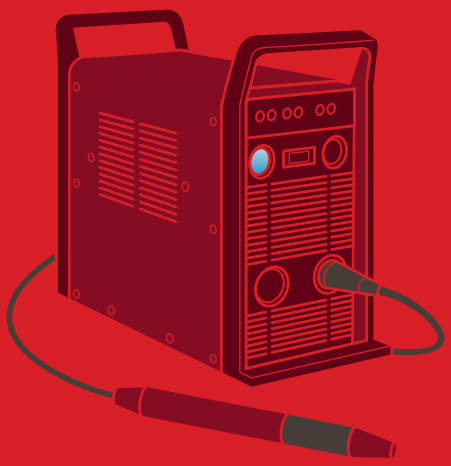

Plasma Cutter, $10,000

toolking.com/hobart/view.asp?id=4276

It's more difficult to use than a laser cutter, but there's a big advantage: it cuts metal or anything that conducts electricity. Think of it as a robotic oxy torch. You can be up and running for about 10K. Make your own parts for that car restoration project or build custom aluminum chandeliers. Poor maker's alternative: An oxy torch and a very steady hand or a high-quality bandsaw and lots of patience.

Laser Cutter, $19,900

epiloglaser.com/mini2412.htm

CAD-driven high-powered lasers cut plastic, paper, and wood in thicknesses up to about ⅜ inch with very high precision. For kicks, you can write your name on toast or etch your face on an eggplant. They're also good for cutting rubber stamps. Poor maker's alternative: Print the patterns with your inkjet printer and cut them out with a scroll saw. Not as accurate or as fast, but a workable workaround.

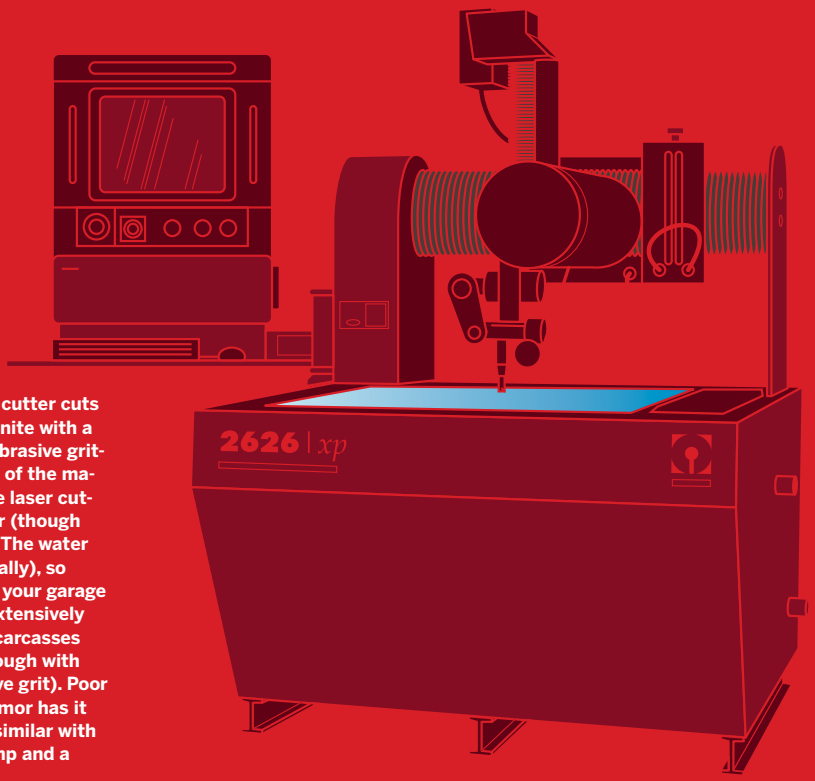

Water Jet, $100,000

omax.com

This rich man's plasma cutter cuts through 8 inches of granite with a barely subsonic jet of abrasive grit-filled water. It has none of the material restrictions of the laser cutter or the plasma cutter (though it isn't great for wood). The water tank weighs a ton (literally), so you'll need to reinforce your garage floor. Neat fact: Used extensively for cutting up chicken carcasses and chocolate bars (though with water only — no abrasive grit). Poor maker's alternative: Rumor has it you can do something similar with a washing machine pump and a hypodermic needle.

THE ULTIMATE TOOL BUYING GUIDE

A complete list of tools you need to make almost anything.

If a genie were to grant me my wish for a shed full of tools, this is what I'd ask for. Think of it as an extremely biased guide to outfitting yourself with the ultimate shop for launching your own space program. Tool reference numbers from McMaster-Carr (mcmaster.com)

- Necessity
- Priority
- Extremely useful
- Surprisingly useful
- Infrequent but handy
- Can do without, better with
- You didn't know it was so lovely

Hand Tools

Tool Name	McMaster #	$ Budget	$ Deluxe
Box Knife	3814a11	1	10
Precision Blade	35435a11 38995a71 35515a12	1	10
Claw Hammer	6484a21	10	50
Ball Peen Hammer	6481a31	10	50
Blacksmith's Hammer (Heavy Weight)	6462a24	10	80
Rubber Mallet	5917a8	10	40
Miter Box	4201a11	15	45
Hacksaw	4086a34	5	25
Tight Spot Hacksaw	4060a16	2	5
Hole Punch Tool	3461a22	40	150
Center Punches and Chisel Set	3506a76	25	120
Metric and Imperial Socket Sets	7290a24 5757a35 5582a11	30	1200
Torque Wrench	85555a221	50	300
Hex Key Sets, Imperial and Metric	5541a31 5215a24 7162a13 5215a12	2	80
Torx Key Set	6959a85	2	40
Mini-Hex Drivers	52975a21 7270a59	2	40
Combination Wrenches, Metric and Inch	5314a62 5304a73 5314a25 5772a53	25	800
Vise Grip Long Nose Locking Pliers	7136a19	2	50
Needlenose Pliers, Small and Large	5451a12	2	35
Bull Nose Pliers, Small and Large		2	35
Vise Grip, Large	7136a15	5	60
Vise Grip, Med Curved	5172a17	5	45
Adjustable Wrenches	5385a12 5385a15	3	40
Crow Bar / Ripping Bar	5990a2	2	30
Tube Cutter	2706a1	15	80
Glass Cutter	3867a16	2	25
Bolt / Chain Cutter	3771a15	50	150
Sheet Metal Snips	3585a13 3908a11 3902a9	10	40
Finishing Saw	4012a1	10	30
Coping Saw	4099a1 6917a11	4	10
Hole Saw Kit	4008a71	25	120
Pull Saw	4058a52	10	20
Metric / Inch Tap and Die	2726a66	40	1200
Drill Sets	28115a77 31555a55 31555a56 31555a57 8802a11 8802a12 8802a13	5	1200
Deburring Taper	3018a4	5	80
Deburring Tools	4253a16 4289a36	2	25
Drill Stops	8959a16	2	10
Vise	5344a31	10	1500
Clamps	5165a25	2	45
Quick-Grips	51755a7	15	50
Jaw Puller	6293k12	50	180
Files	8176a12 8194a12	2	100
Hydraulic Floor Jack		25	200
Block And Tackle / Lifting Winch		50	500
Screwdrivers, Flat and Phillips	8551a31	1	90

Tool Name	McMaster #	$ Budget	$ Deluxe
Jeweller's Screwdrivers	52985a21 52985a23	10	40
Propane Burner		10	50
Heat Gun		50	250

Power Tools

18V Electric Drill	29835a16	25	300
Band Saw	4164a12	250	5000
Reciprocating Saw (Sawzall)	4011a25	120	250
Sliding Compound Miter Saw	3001a21	200	600
Tilting Table Saw	27925a12	300	2000
Drill Press	28865a31	100	2500
Plunge Router	36485a11	100	300
Manual Lathe	8941a12	500	5000
Mig Welder	7899a28	200	1500
Stroboscope	1177t92	25	250
Adjustable Hot Plate	33255k61	50	800
Dremel	4344a42 4370a5	50	150
Angle Grinder	4395a16	50	250
Bench Grinder	20535A654	75	300
Belt Sander	4892a21	100	200
Disc / Belt Sander	46245a49	250	1500
Bridgeport Mill		500	15000
Heisseschneider Hot Knife		50	200
Sewing Machine		25	2500
Air Compressor	4364k3	200	2500
Spot Blaster	31195k11 3210k11	50	500
Vacuum Pump		100	1000+
Oxy / Acetylene Torch	7754a12	250	1500
Plasma Torch		600	3000

Computer Controlled Tools

Inkjet Printer		25	250
Large-Format Printer		900	25000
Nc Mill		2500	120000
Nc Lathe		5000	150000
Laser Cutter (Co2)		12000	50000
Plasma Cutter		3000	20000
Wire / Sink EDM		100000	250000
Water Jet		80000	150000
3D Printer (Z Corp, FDM, STL)		25000	250000
Plotter / Cutter (Roland)		1000	25000

Electronics Tools

Wire Stripper		2	80
Pliers Set	5323a49	10	120
Work Holder And Magnifier	5007a14	5	100
Multimeter		75	250
Temp-Control Solder Station		150	1000

Tool Name	McMaster #	$ Budget	$ Deluxe
Hot Air Tool for Point Reflow / Desoldering		30	500
Bench Power Supply, Multi-Output		150	500
Toaster Oven, Adjustable Time / Temp		40	60
Microscope (See Safety / Measurement / Visualization)			
Oscilloscope		500	5000
Micro-tweezer Sets		2	100
Pick-n-Place		3000	25000

Fetish Tools

Optics Bench		1000	400000
Mask Writer		50000	1000000
Mini-jector		4000	50000
Thermoformer		1000	20000
ESEM		25000	500000
3D Scanner		5000	100000
Excimer Laser Cutter		100000	1000000
PCR			100000
Micropippettes		20	2000
Spin Coater		500	25000
High Temp / Vacuum Oven		2000	30000
Chemistry Hoods and Glass Equipment		2000	1000000
Ultrasonic Welder		5000	25000
Tube Bender		1000	40000
Tanks for Anodizing, Etching		25	2500
Kiln		500	5000
Anvil		250	1000
Crucible		20	2500
Thin Film Evaporator / Sputterer		5000	100000

Safety, Measurement, and Visualization

Safety Goggles	2404t21	1	10
Ear Muffs	9205T6	2	30
Micrometer	2054a75	5	300
Caliper	8647a44	5	500
Head-Mounted Magnifier	1490t3 1509t14	5	120
Feeler Gauges	2070a7	1	25
Spirit Level	2169a4 2169a1	5	50
Tape Measure	19805a74	1	25
Adjustable Stereomicroscope	10705t64	500	25000
Hot Gloves		5	100
Work Gloves		1	40
Welding Mask		15	100
Rules	2042a77 6823a61 20265a36	5	100
Shop Vac	70215t26	60	200

TIGHT-FIT WORKBENCH

Make an inexpensive workspace for crowded quarters. By Todd Lappin

It's hard to be a maker if you don't have a good place to do your making. Yet two things often stand in the way of building out a basic home workbench: high cost and limited space.

Industrial-grade fixtures and spiffy garage storage systems cost a pretty penny. Likewise, domestic real estate is a scarce commodity — garages must still be used for parking cars, basements for storing stuff, and utility rooms must shelter washing machines and assorted whatnot.

I faced those constraints and a little more when I set out to build a simple workbench in my narrow garage. To avoid getting in the way of my car, the bench had to be shallow — no more than 2' deep. I needed lots of storage for tools, small parts, and bulky boxes of big stuff.

And just to make things more challenging, I also had to build the bench around several pre-existing drain and sewer pipes that intruded upon my already-limited workspace. Here's how I built the simple bench setup shown above.

Lighting

Bright, shadow-free light is essential when doing precision work or manipulating small parts. This was one area where I lucked out. We'd recently renovated our house, so my garage started out with brand-new fluorescent light fixtures running along the ceiling. Otherwise, a plug-in overhead fluorescent fixture would have been an inexpensive way to go. I also keep a simple $5 clip lamp on hand for task lighting.

Photography by Todd Lappin

The Workbench

Given my spatial constraints, I was tempted to build my own workbench from scratch, using 2×4's and plywood. Ultimately, however, I decided it was easier (and probably cheaper) to look for something off-the-shelf. The workbenches sold at many of the big chain hardware stores are overpriced and under-built, but Global Industrial (globalindustrial.com) offers several industrial-grade benches for $150 or less. Trouble is, they're also big, typically 60"×30". I didn't have that much room, and because of our intruding drain pipes, I also had to find something that didn't need to sit flush against the back wall.

I found the ideal solution at Ikea, much to my own surprise. Ikea's "Antonius" line is a cantilevered storage system built around upright metal rails that screw into the wall. A compact workbench configuration is offered, with a laminated particleboard top that's just 24" deep and 47" wide. It's sturdy, versatile, and very cheap — less than $50 for all the required parts.

Tool Storage

Ikea offers a pegboard option for the Antonius storage system, but it uses a square hole pattern that's incompatible with standard pegboard fittings. I avoided that problem by simply screwing a half-sheet of standard round-hole pegboard to the back of the workbench.

To store the rest of our tools, my wife donated the red Sears Craftsman tool chest that she'd previously used in her home office (I knew I'd married well). These are also surprisingly affordable, and basic models can be had for around $175.

Parts Storage

Ah, the little stuff: nuts, bolts, screws, nails, tapes, glues, wall anchors, wire, and whatnot. These things should be readily accessible, but storing parts in coffee cans and plastic deli containers quickly grows cumbersome.

A "pick rack" of removable plastic bins — the kind used in factories and warehouses — is a simple and affordable way to get the job done. Global Industrial sells bin unit sets that come with 32 small bins and a 36"×19" wall-mounting panel, all for around $50. Bigger sizes, with many more bins, are also available.

A "pick rack" of removable plastic bins is a simple way to organize the little stuff.

Bulk Storage

A good shelving system is the best way to make efficient use of limited floor space in garages and other mixed-use areas. Again, the temptation here is to simply build a vertical shelving unit from scratch, but in the interests of future-friendly expansion and flexibility, I'm going prefab.

The steel Gorilla Rack shelves sold at Costco or Home Depot are sturdy and cheap, but they're usually sold in just one size and configuration (which may or may not suit your needs). Global Industrial offers a variety of commercial-grade shelving systems in a very wide range of heights, widths, depths, and shelving configurations, at very reasonable prices — all the better to make the most of every square inch of precious space.

Options and Accessories

With my major infrastructure in place, I added a few more bolt-on components to complete the setup. I screwed a 2' power strip into the top-rear edge of the Ikea workbench, to provide plenty of electrical outlets for rechargeable tools and soldering irons. Magnetic strips designed for kitchen knife storage also work well to organize frequently used hand tools. Ikea sells these on the cheap, so I bought one and mounted it to the pegboard. Now I'm well-lit, neatly organized, and fully powered up. Time to get to work!

Todd Lappin (telstar@well.com) moonlights as fleet operations officer for Telstar Logistics, a leading provider of integrated services.

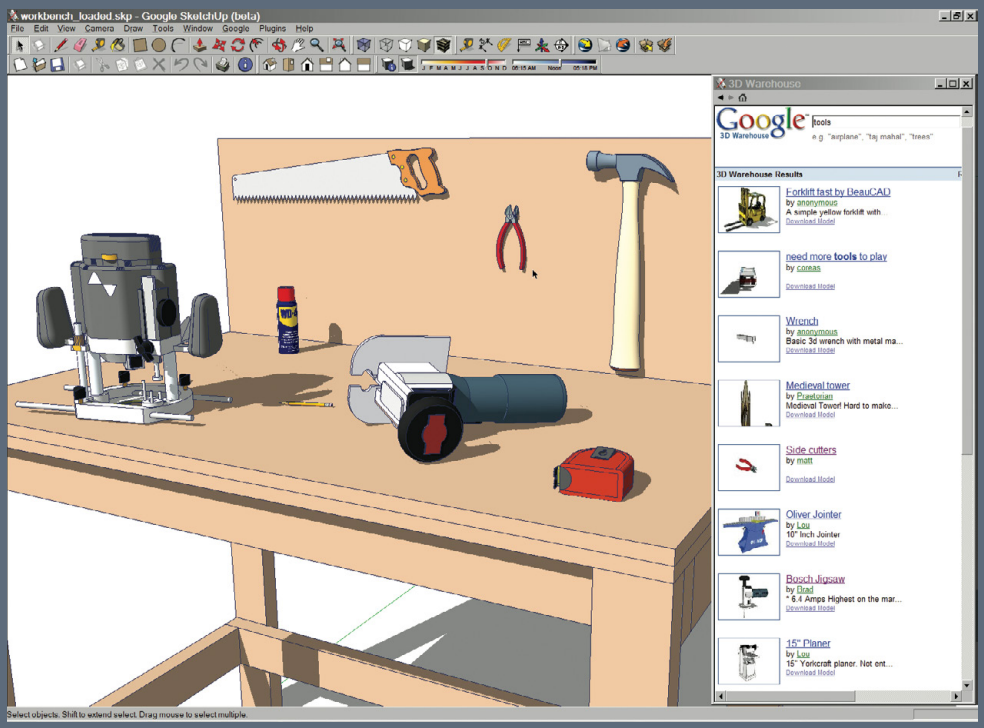

SKETCHUP WORKBENCH

Design your own work area with Google's free drawing application. By John Edgar Park

Google SketchUp is my favorite design tool, and if all goes according to plan, it'll soon be yours, too. Even though I use higher-end 3D software all day at work, SketchUp still blows me away; it enables fast, fun, and accurate 3D sketching unlike any other program (it's free too!).

Makers will find SketchUp useful for all sorts of things, from furniture design to workshop layout, from project enclosures to robotic exoskeletons. It's good for this kind of stuff because you can rough out your designs quickly, using real-world dimensions.

I decided to use SketchUp to design a much-needed workbench. The first phase was to create the conceptual model, which is a rough 3D sketch of the form. The second phase was design engineering, where I figured out the real-world materials list and construction plan for the project.

TOOLS

PC or Mac of somewhat recent vintage Google SketchUp software (free download)

Illustrations by John Edgar Park

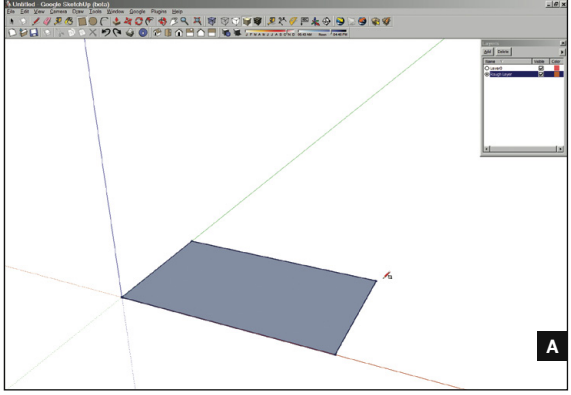

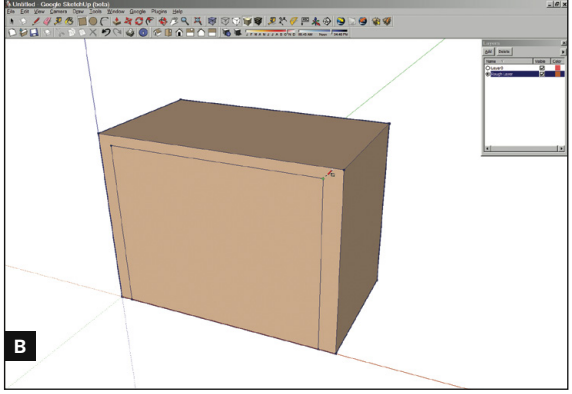

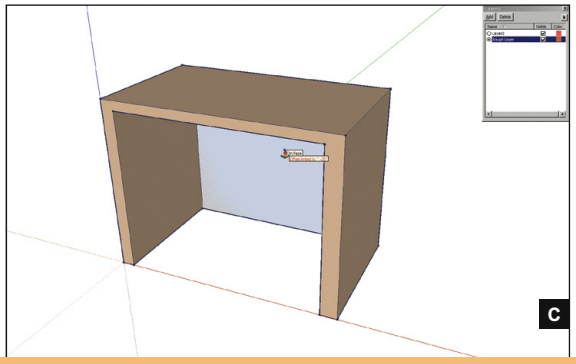

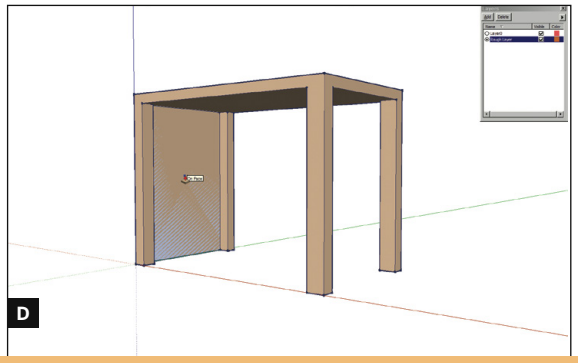

Fig. A: Draw a rectangle.
Fig. B: Mark the side for the cutout.
Fig. C: Carve out the underside.
Fig. D: Make the leg cutouts.

Build a Workbench in SketchUp

Phase I. Conceptual Design

1. Get SketchUp running.

1a. Download and install SketchUp from sketchup.google.com. It's available for OS X and Windows XP (please join me in begging for a Linux version).

1b. Launch SketchUp and do the introductory tutorial listed under Help→Self-Paced Tutorials →Intro to get a feel for viewport navigation and the basic drawing tools.

2. Prepare your project.

2a. Create a new project by clicking File→New. Set the units to fractional inches by going to Window→ Model Info, choosing the Units category on the left, and then picking Fractional from the Format list. This means that measurements in this project will be listed in inches only, instead of feet and inches. Also, go to Window→Styles, click the Edit tab, and turn on Endpoints. This makes vertices easier to see.

2b. Use the Select tool (found under Tools→Select) to click on the 2D man living in your scene. His name is Bryce. Click Edit→Hide and wave goodbye to Bryce.

2c. I like to organize the models within each project on their own layers to control visibility and interaction between parts. Add a new layer for the conceptual phase by choosing Window→Layers and then clicking the Add Layer button in the Layers window. Name the layer Rough Layer and make it active by clicking the Active radio button. The active layer is where all new objects will go.

3. Rough out the form.

3a. It all begins with a rectangle. Choose Draw→ Rectangle. Now, click the left mouse button on the origin (the center of the scene where all axes cross) and drag toward an opposite corner, paying attention to the measurements in the lower right corner of the interface. Release the mouse button to finish. Immediately after you draw a shape, you can type in dimensions to set an exact size; type 48", 28" and press Enter on the keyboard. (No need to click anywhere, just start typing.) A shaded rectangle appears (Figure A).

3b. Extrude the tabletop upward to give the model height. Choose Tools→Push/Pull. This tool is fun to use; put the cursor over the tabletop face, then click

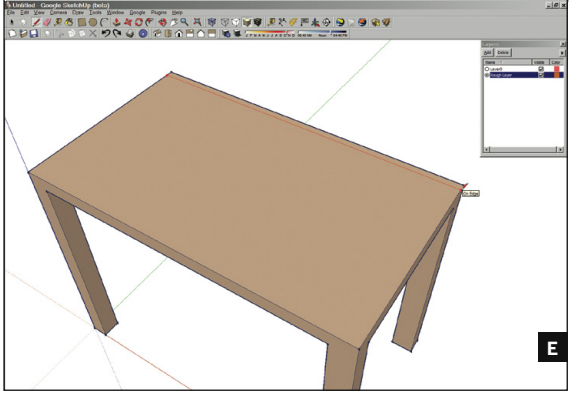

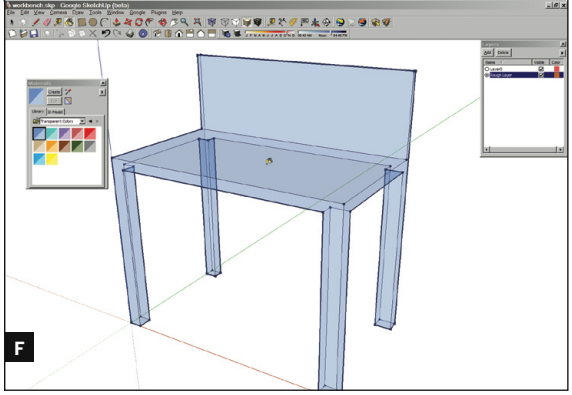

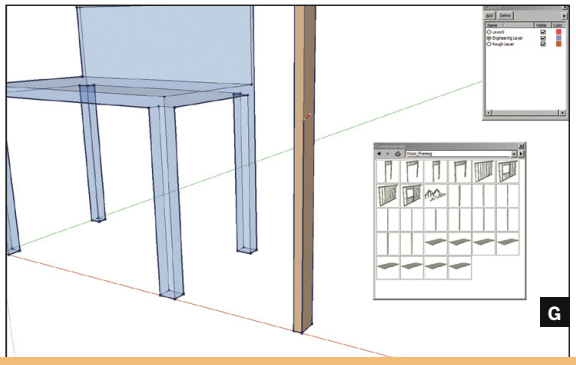

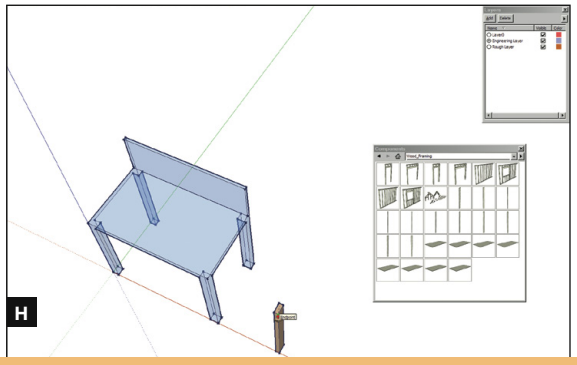

Fig. E: Measure out a line for the pegboard.
Fig. F: Paint the rough model translucent.

Fig. G: Measure for the leg cut.
Fig. H: Group the legs.

and drag upward. Release the mouse button, and key in an exact height of 36".

3c. Time to cut out the underside. Create a measurement guide 3" from the bottom left corner with the Tape Measure tool by clicking once on the corner point and a second time anywhere along the bottom edge. Type 3" and press Enter to set the exact measurement. Use the Rectangle tool to draw on the front face of the model. Start the rectangle at the measurement guide you just made. End the rectangle at around 42", 34" — again, you can type these dimensions to be precise. Although this is a rough model, some of the following steps work best if the rectangles you draw are of a consistent height (Figure B).

3d. Use the Push/Pull tool to push this new face all the way to the back of the model. You'll see an inference pop-up declare "On Face" when your cursor is aligned with the back face. Release the mouse button and you'll have carved a large chunk out of the model (Figure C).

3e. Repeat this procedure twice more on the inner sides of the workbench to leave the tabletop standing on 4 legs. Start each rectangle at the bottom edge, 2½" from the side, measuring this off with the Tape Measure tool first. The dimensions should be 23", 34" (Figure D).

4. Add details.

4a. Next, add a pegboard for tool storage. Choose the Line tool (the pencil) from the Draw→Line menu item. Click a point on the left edge of the tabletop near the back edge of the table. Begin moving the cursor to the right side to draw your line — a red inference line appears when your line is parallel to the x-axis. Continue until you reach the right edge and a message pops up to let you know you've intersected the edge. Click to lay down the second point, which will complete your line (Figure E).

4b. Using your Push/Pull tool, pull up the small face at the rear of the tabletop to an appropriate height, around 16".

4c. In the next phase, you'll use this rough model as a template for your design engineering model. To make that easier, paint a semitransparent material on the rough model. Go to Tools→Paint Bucket, and choose Blue Glass from the Transparent palette. Shift-click your model to paint it (Figure F).

4d. Save your scene by clicking File→Save As and type in the filename *workbench.skp*. Click the Save button.

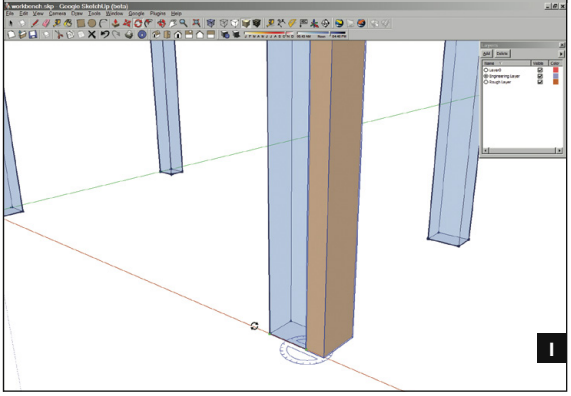

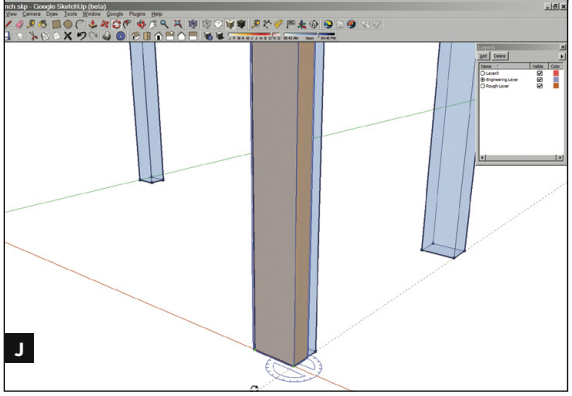

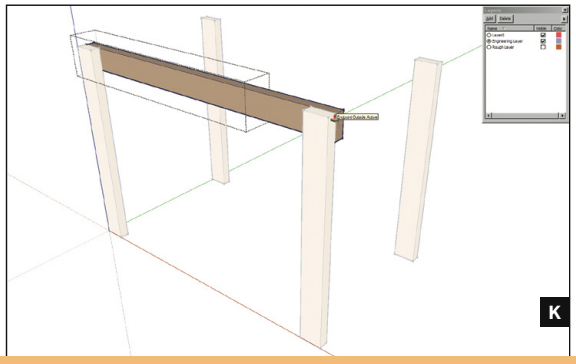

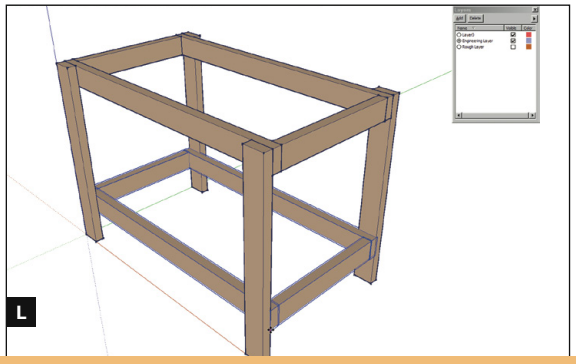

Fig. I: Prepare to rotate the leg.
Fig. J: Rotate the leg 90º.

Fig. K: Create an upper support stud.
Fig. L: Duplicate the upper parts for the lower frame.

Phase II. Design Engineering

5. Choose components.

5a. Create a new layer (Window→Layers). Name it Construction Layer, and make the layer active.
5b. Open the Component window by clicking Window →Components, and then choose Construction from the drop-down menu. Here you'll find the 2×4 we'll need. Click-drag the 12'-long 2×4 stud from the Component window to your scene.

6. Cut lumber.

6a. Right-click on the stud and choose Explode from the menu. Sorry, nothing dramatic happens, but this does let you edit the stud.
6b. You'll measure the cut with the Tape Measure tool. Create a measurement guide by clicking on a corner point at the bottom of the stud and then click again partway up the same edge. Type in the height of your leg cut, 34", and press Enter (Figure G).
6c. Use the Push/Pull tool to drag the top face of the stud down until it snaps to the Guide Point you measured, thus cutting the leg down to 34".
6d. With the Select tool, triple-click the stud to select all connected faces, and then group them by clicking Edit→Make Group (Figure H).

7. Make copies.

7a. Select the leg, then choose Tools→Rotate and rotate the leg 90° on the z-axis (the protractor should be blue). Then, click Tools→Move and move the leg into position over one of the legs of the rough model. Do so by clicking once on one of its bottom points, and then a second time on the equivalent point on the rough model (Figures I and J).
7b. With the leg still selected, duplicate it by clicking on Edit→Copy, and then Edit→Paste. Position the new leg and then repeat for the remaining legs.
7c. Clean up the screen by turning off the Rough Layer visibility in the Layers window.

8. Support frame.

8a. Paste, move, rotate, and resize (phew!) one of the legs to create the front upper support. In order to edit the length of the stud, double-click the group with the Select tool, then use the Push/Pull tool on one end face. Repeat this step 3 times to complete the frame (Figure K).
8b. Duplicate the frame parts downward to support the lower legs, about 6" up from the bottom. Do this by shift-selecting the parts and using Edit→Copy, then Edit→Paste (Figure L).

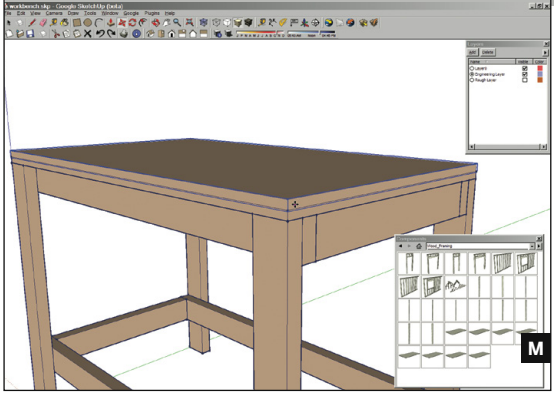

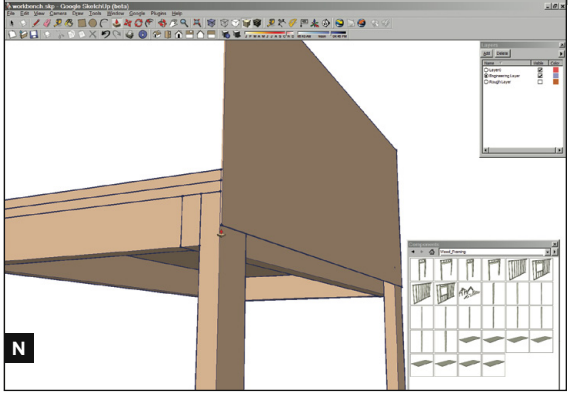

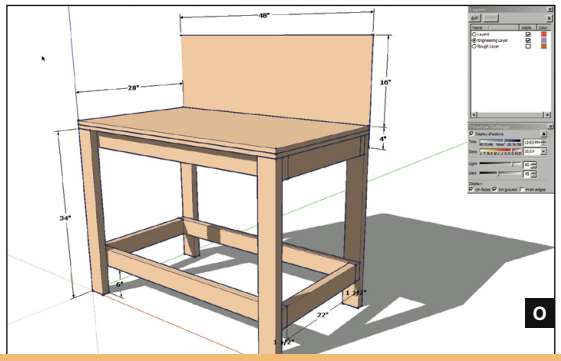

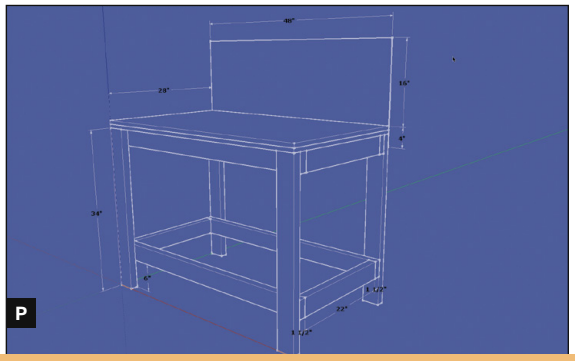

Fig. M: Cut two plywood sheets for the top.
Fig. N: Resize the pegboard.

Fig. O: View the dimensions and shadows.
Fig. P: Impress your friends with the blueprint render style.

9. Top it off.

9a. Grab a standard sheet of ¾" plywood for the top of the workbench from 3D Warehouse, the user-supported model repository. Click File→3D Warehouse→Get Models. In the search field, type "¾ thick plywood". When you find it, click Download Model, then click Yes to load it into your scene. Snap it to the top of the bench, then cut it down to size the same way you did the 2×4s. For a sturdy work surface, lay a second piece of plywood on top of the first (Figure M).

9b. You can now add the pegboard to the back. Use the 3D Warehouse to import and place a sheet of ⅛" plywood. Then, use the Push/Pull tool to extrude the pegboard piece 16" above and 4" below the bench top (Figure N). Save your model by clicking File→Save.

10. Note dimensions.

10a. To add dimension annotations to the model, choose Tools→Dimensions, then click on 2 points you need dimensions for, dragging outward to place the text. Repeat this for any unique cuts or measurements.

10b. Choose a flattering camera view and then click File→Print. Now that you're done, show off your new workbench in its best light; turn on shadow rendering by clicking View→Shadows. You can adjust lighting in Window→Shadow Settings (Figure O).

By playing with the scene's color setting found in Window→Styles, you can create the clean look of a blueprint, the loose lines of a charcoal rendering, the paranoia of a watermarked painting, and more (Figure P). Snazzy!

RESOURCES:

3D Construction Modeling by Dennis Fukai from insitebuilders.com

SketchUp Level 1 training DVD from go-2-school.com

Official SketchUp forum: groups.google.com/group/sketchup

Live by the golden rule; share your models via the 3D Warehouse. Be sure to tag them with the word *MakeMagazine*.

Looking for more models? Search the 3D Warehouse, the user repository of SketchUp models. Go there by clicking File→3D Warehouse→Get Models.

John Edgar Park rigs CG characters at Walt Disney Animation Studios. He is the author of *Understanding 3D Animation Using Maya*. Read about his house addition at parkhaus.blogspot.com.

For more info, corrections, and discussion on this piece, please visit makezine.com/10/diyworkshop_sketchup

No exotic screw head is a match for someone wielding some Silly Putty and a Dremel tool.

Photograph by Amy Nightingale

FREEDOM TO UNSCREW

Make tamperproof driver bits by molding the screw heads. By Johnathan Nightingale

When a friend asked for my help removing some nonstandard screws from his doorframe without damaging them, I expected a little resistance. Many manufacturers use so-called tamperproof or security screw heads to prevent casual would-be hardware hackers; tamperproof Torx, spanner bits, and Tri-Wing being some of the more popular types. This security-by-obscurity approach can usually be foiled with a security bit set available in most hardware and electronics stores, though, and I assured him we'd have that panel off in no time.

The screws in question, however, were not of the standard varieties. Rather than having a bit pattern cut into the center of the screw head, this was basically a round head with three notches removed from the edges to form an equilateral triangle. Some research online revealed that the screw was a Tri-Groove design (for an excellent reference on standard security screw types, see *lara.com/reviews/screwtypes.htm*). What's more, individual driver bits for this head type can cost up to $10 a piece. When our attempts to use pliers and brute force failed, I decided to make a bit myself. I would need to get a cast of the screw head for reference, find a suitable source material for the driver, and then use a Dremel to handle the metalwork.

TOOLS:
One "egg" of Silly Putty
One set of dollar store hex keys (a.k.a. Allen keys)
Dremel
Polyfilla drywall compound, or some other quick-drying spackle

There are better molding compounds than Silly Putty, but few are as cheap, and its weaknesses,

First impressions: Make a mold out of the tamperproof screw head with Silly Putty. From this, you'll make a cast out of ordinary wall spackle.

particularly its tendency to "flow" and lose definition, shouldn't matter for the short timespan required. Work the putty to soften it, and then press it onto the panel. One advantage of such a soft casting material is that it easily fills countersunk holes. Once removed, I covered the reverse mold of the screw head with spackle and let it dry. It gets fragile once dried, so handle it carefully; it should be mostly an eyeball reference anyhow.

Grinding Away

I took the cast back to my shop. The decision to use Allen keys was automatic — they are excellent, self-contained tools, they're cheap, and are made of solid, uniform metal. Since the Tri-Groove screw head is basically just three notches, I had to remove metal from the head of the hex key until only three "posts" remained, to match the notches of the head. The fact that the keys are hexagonal in shape helped here with the equilateral spacing of the posts.

Using the Dremel with a cut-off wheel, I began the process of removing material from the hex head to create my bit. It is essential whenever doing metal work like this to have a glass of water handy, so you can quench the key every few seconds. If the metal starts heating, it gets harder to hold, of course, but the greater problem is that you can overheat a section and temper the metal. This will make it very hard but also brittle, which is not a desirable feature in a driver bit. Make a cut, quench, make another cut, quench. Of course, eye protection is essential as well.

Throughout the process, I referred to the cast I had made to ensure that the posts were positioned and shaped correctly. Several times, I thought I was finished only to find that when I tried to match the key to the spackle cast, the posts were too fat. I was leaving too much material from the center of the key on the posts, so they would have impacted the screw head instead of sliding into the notches. Eventually though, the driver matched the cast, and after some sanding with medium grit sanding cloth to remove any burrs (a tstep altogether), I had a functional, if unbeautiful, Tri-Groove driver.

Johnathan Nightingale is an IBM software maker by day, tinkerer by night.

Photography by Johnathan Nightingale

For more info, corrections, and discussion on this piece, please visit makezine.com/03/diy_driverbits

Whistle while you work: this set of tiny tools will get you out of many a tiny jam.

Photograph by Bob Scott

KEYCHAIN SURVIVAL TOOLS

Whether you're facing a parachute drop into the High Sierras or a jammed button on your mobile, some handy keychain gizmo can be there for you. By Bob Scott

Although my daily routine doesn't include as many parachute drops as it probably should, I still like to be prepared. Here's what's keeping my keys company.

Lighting

Whether reading a menu at your local diner or coping with a blackout in a high-rise office, a reliable light is a must.

LRI's Photon (*photonlight.com*) series are probably the best-known keychain lights and for good reason. They're reasonably rugged, light, and dependable. I've been using the white LED version of their latest Freedom light, which features easily adjustable brightness, extended run time, and doubles the light output of earlier models, all for about 20 bucks.

If you want something really tiny, check out the hearing-aid-battery-powered Firefli. Barely big enough to find, it features a clever valve arrangement in the on/off switch that extends the normally short "use it or lose it" life of the zinc air batteries.

Signaling

Unless you're an opera star or door-to-door cymbal salesman, you can't bet on being able to signal for help in a crisis. If you've ever enjoyed an evening stuck in an elevator, you know you can shout yourself hoarse in a few minutes. A good whistle,

on the other hand, can attract attention over a wide area and weighs next to nothing.

My old standby is a $5 Fox 40 Mini (*fox40whistle.com*) with the cosmetic side plates dremeled off to reduce its size. Fox has recently released a new Micro model that features a flatter profile than my hacked version, and it's reportedly just as loud. Both have no moving parts and work even after being submerged.

Tools

The Micra and Squirt from Leatherman (*leatherman.com*) are pleasant standouts in an otherwise bleak sea of cast metal junk. Both pack a good selection of tools centered around a clever set of spring-action scissors or needlenose pliers. Also check out RadioShack's version that replaces the standard pliers with a wire stripper. $30 to $40.

Compass

I've used this more than I care to admit. My favorite is the liquid-damped Pocket Compass manufactured by old-school knife maker Marbles (*marblesknives.com*). About $15. If you insist on spending more, the $50 Traildrop II Digital Compass & Temperature Keychain (*www.highgearusa.com*) offers a backlight and all the functions you'd expect from a gizmo with a microchip and an LCD.

Test Gear

How about a $160 nuclear radiation detector? Looking vaguely like a car alarm remote, the NukAlert (*nukalert.com*) operates continuously, sounding an alarm when it detects a life-endangering amount of gamma or X radiation. By listening to the ten distinct alarm levels, you can plot a quick course out of a danger area or, better yet, avoid entering one.

Does it work? Beats me. My lease is vague about storage of high-level radiation on the premises, so I wasn't able to evaluate the manufacturer's claims. Their status as a state-licensed nuclear calibration facility is reassuring, though.

Bob Scott is a statistical construct of various consumer electronics marketing departments.

USB Thumbdrive Fill Up

Rather than haul around a bunch of wasted space on your keychain drive, why not keep some useful data on there between big file transfers? For instance:

Browser: Either a standalone installation of Firefox (see Volume 01 of MAKE) or at least a current copy of your bookmarks, exported from your browser as an HTML file. Add a copy of your RSS news and podcast feeds for access on the road, or to share with friends.

Data: Besides the current project information that you're sure you'll need, grab a copy of all documents less than 90 days old from the "My Documents" folder on your computer. Add a PDF version of your contact list in case your PDA packs up.

Email: If you haven't converted to a web-based email service, you may want a copy of your relevant mailboxes or a critical subset of your Outlook .pst file.

Photos & Music: Interesting photos you've shot in the last few weeks, a couple from the last vacation, and some sentimental favorites can all be big hits at the office or when visiting friends. Throw in your top 20 MP3s as a boredom antidote.

Manuals: Having a PDF copy of the manuals for your cellphone, camera, and car can come in very handy on trips. (Check the relevant OEM's website for these gems.)

Software: You've probably got a list of your "go to" programs, but before dragging all those zip files over, see what you can get from the web (e.g., online virus checkers like Trend Micro's Housecall). You may be better off with just a bookmark.

ID: Put a "Please Return Me To.txt" file containing your contact information in the root directory. You may get lucky.

If you've got any particularly sensitive data, consider encrypting it and keeping a copy of the decryption program (but not the password!) on the drive as well.

Once you've got the drive set up to your satisfaction, copy the files back to a dedicated file folder on your PC. Then you can erase the thumbdrive if you need the space for a big file transfer, and quickly restore it when you get back to your PC. *— BS*